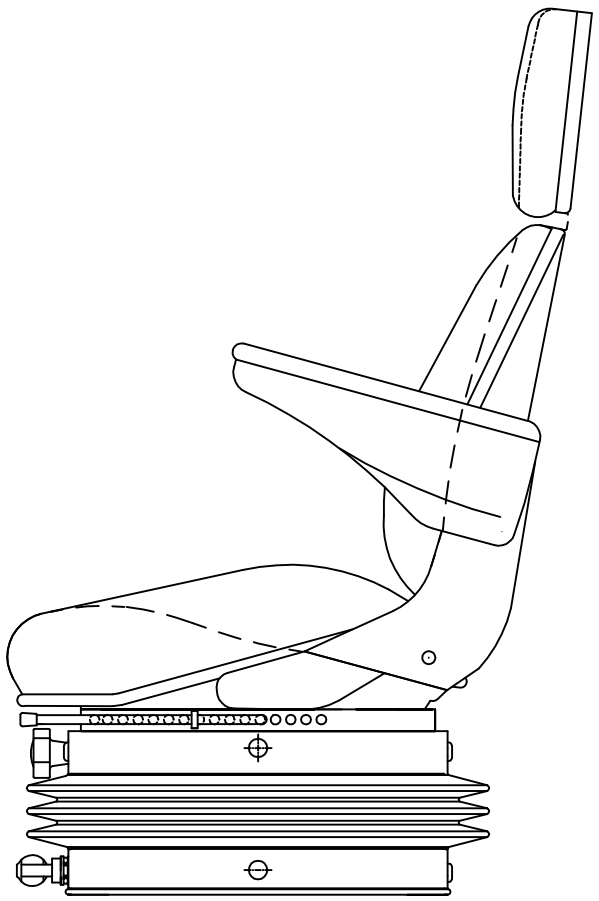

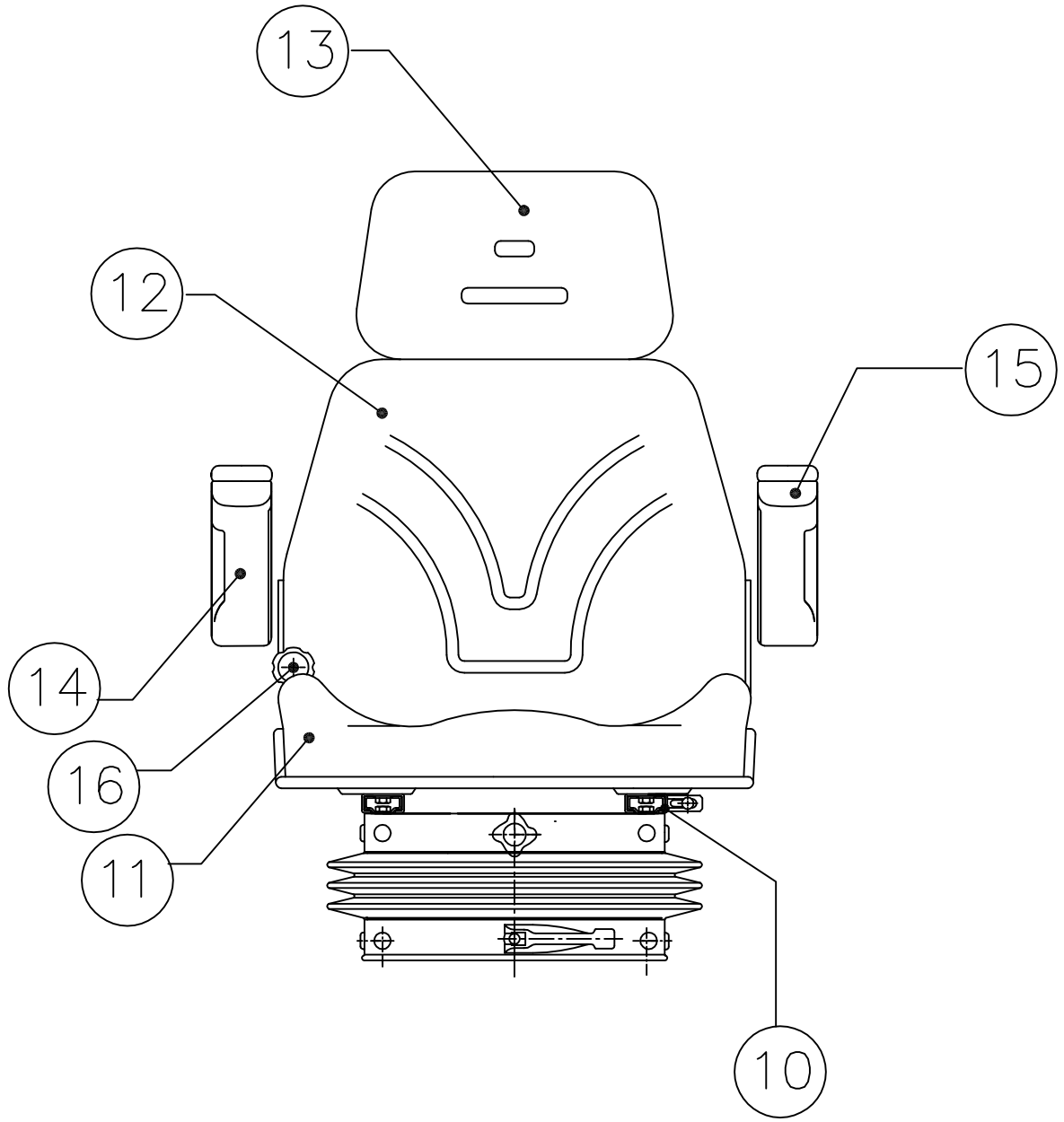

16	1	PLA030	BACKREST ADJUSTEMENT
15	1	INA009NSX	LEFT ARMREST
14	1	INA009NDX	RIGHT ARMREST
13	1	FLA085BK	HEADREST
12	1	FLA084BK	BACKREST CUSHION
11	1	FLA080RBK	SEAT CUSHION
10	1	GUI001C	SLIDES
9	1	012032520	HEIGHT STOPPER
8	1	ACC046	THRUST BEARING 51101
7	1	ACC090B	RUBBER COVER
6	1	01300887027	SPRINGS SUPPORT
5	4	ACC041C	SPRINGS
4	1	ACC252-A	HIDRAULIC SHOCK ABSORBER
3	1	02007887030	TENSION SPRING
2	1	PLA887052	HANDWHEEL HEIGHT ADJUST.
1	1	PLA028GN	LEVER WEIGHT ADJUSTEMENT
N°	QUANT:.	PART N°.	PART NAME

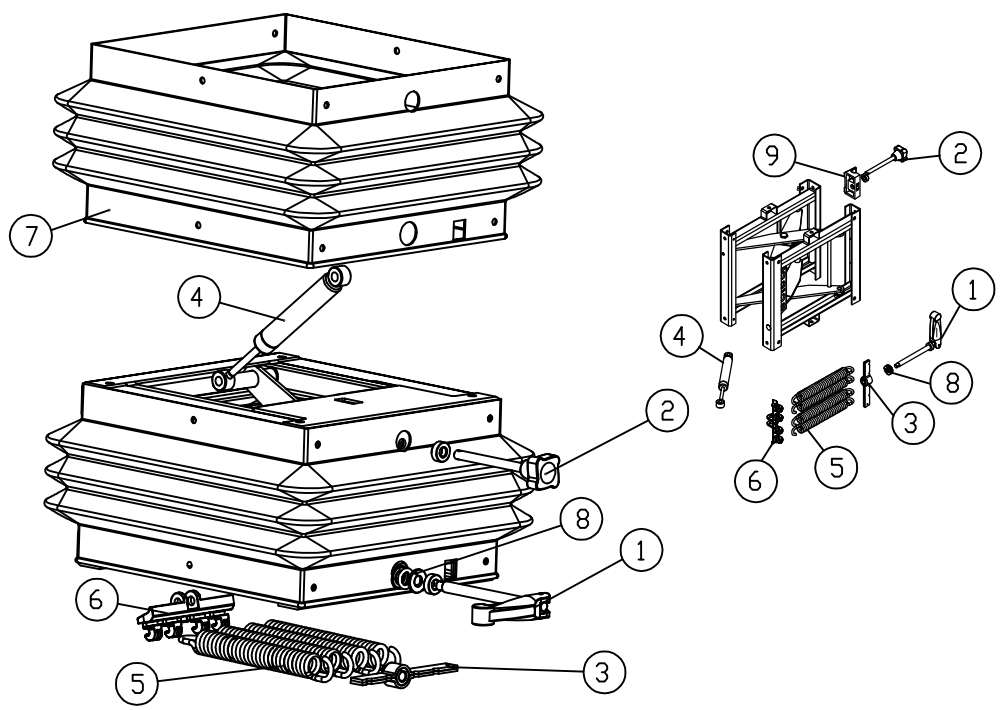

PRE-TRATTAMENTO SUPERF. (1st SURF. TREATMENT) --	TRATTAMENTO SUPERF. FINALE (LAST SURF. TREAT.) --	QUANTITA' (Q.TY) --	RUGOSITA' SUPERF. (SURF. ROUGHN.) 1.6 3.2 6.3
TRATT. TERMICO (HEAT TREATMENT) --	PESO GREZZO (RAW W.) (Kg) --	PESO FINITO (FINAL W.) (Kg) --	FOGLIO (SHEET) --

TOLLERANZE GENERALI CARPENTERIA (GENERIC CARPENTRY TOLERANCES): SMUSSI NON QUOT.: 1x45° – RAGGI: R 0,5 (CHAMFERS WITHOUT TOL.: 1x45° – FILLETS: R 0,5)

CESOIA (SHEARING), PIEGA (BENDING) E OSSITAGLIO (OXYCUTTING): ±1 mm – SALDATURA (WELDING): ±2 mm – PIEGATURA (BENDING): ±1°

DIM. LIN. E ANG. (LIN. & ANG. DIM)			TOLL. GEOMETR. (GEOM. TOLS.)			
F	FINE	H	GRADO DI PREC. PER QUOTE LINEARI E ANGOLARI SENZA TOLLERANZA SECONDO UNI–EN 22768–1 (PREC. LEVEL FOR LINEAR AND ANGULAR DIMENSIONS WITHOUT TOL. ACCORDING UNI–EN 22768–1)	C
M	MEDIA(MEDIUM)	K		
C	GROSSOLANA (COARSE)	L	GRADO DI PRECISIONE PER TOLLERANZE GEOMETRICHE GENERALI SECONDO UNI–EN 22768–2 (PRECISION LEVEL FOR GENERIC GEOMETRIC TOLERANCES ACCORDING UNI–EN 22768–2)	L
V	MOLTO GROSSOLANA (VERY COARSE)	—		

DISEGNATO (DRAWN): Trevisi

CONTROLLATO (CHKD): Trevisi

SEAT INDUSTRIES

CAMPAGNOLA (RE) – ITALY

MATERIALE (MATERIAL)

DESCRIZIONE (DESCRIPTION)

SEDILE TOP, MOL698, APPOGIATESTA, BRACCIOLI,TESSUTO BK

A4

COD. ATRZ. (TOOL REF.):

DATA (DATE) 10-01-2019

SCALA(SCALE) no

CODICE (REF.)

TOP665RVB